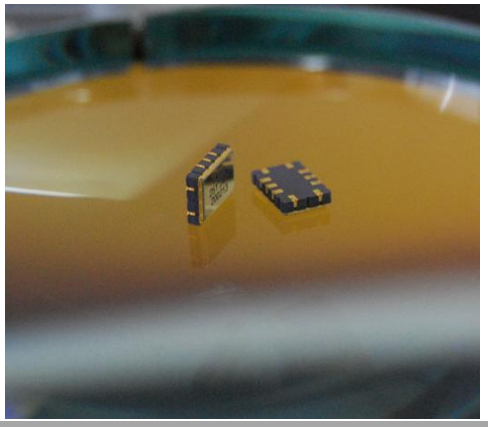

1422 MHz SAW Bandpass Filter
Bandwidth 2.8 MHz

Features

Low insertion loss

SMD Package

P R E L I M I N A R Y D A T A

Typical performance

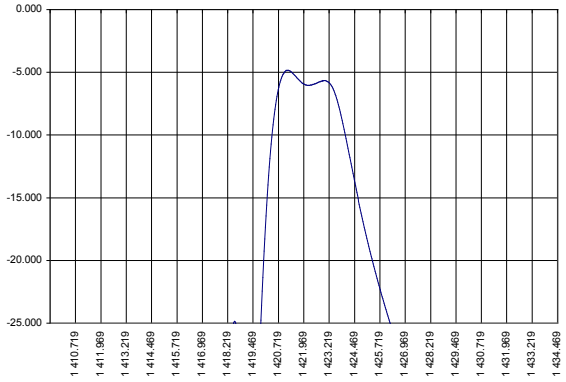

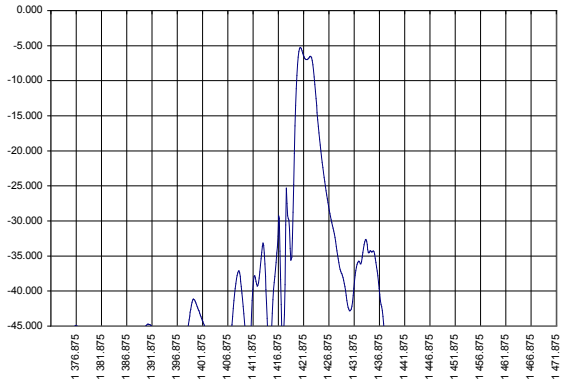

Electrical Specification

Parameter	Unit	Min	Typ	Max
Central frequency	MHz	1421.5	1422.0	1422.5
Inserted loss	dB	5.0	5.5	6.0
Bandwidth @-2dB	MHz	2.6	2.8	-
Bandwidth @-20dB	MHz	-	6.5	-
Amplitude ripple	dB	-	1.5	2.0

Notes

Microsaw reserves the right to make changes to the product and corresponding product specifications without notice. All data is valid for measurements in Microsaw's test fixture under Measurement Conditions: Ambient Temperature 22 ^{0}C, Input Power 0 dBm, Input/Output Impedance 50 Ω.

Package

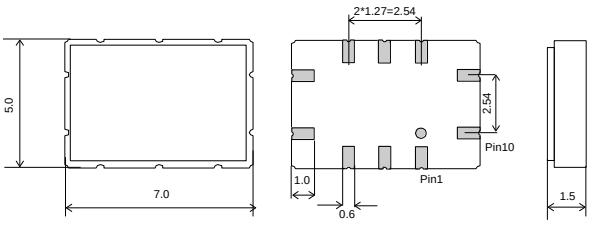

QCC12B

Microsaw OY reserves the right to discontinue manufacturing and delivery of the product. Microsaw's liability is limited only to the product. Microsaw does not accept any liability for applications, which are implemented using the product. A statement about the suitability of the product for certain application ultimately incumbent on Customer to conclude whether the product is suitable for use in a particular application.

www.microsaw.fi

Matching Circuit

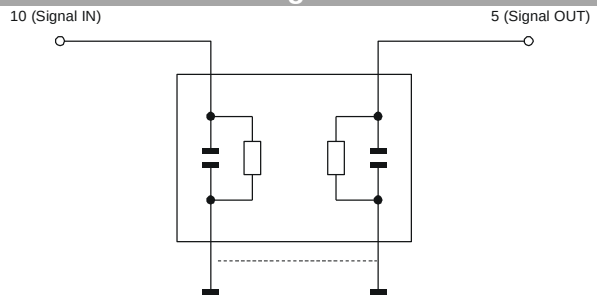

1-4,6-9 (Gnd)
series 3.3pF,parallel 1-2 nH on input port,
series 3.9pF, parallel 1-2 nH on output port
Zin=Zout=50 Ohm

Additional Information

Temperature range	-55…85 ^{0}C
Substrate	36 Quartz
Package	QCC12B
Complies with Directive	2002/95/EC (RoHS)

Important Warnings

Electric Sensitive Device

See soldering chart before using

See frequency shifts depending on temperature

Links to Technical Information

Soldering profile: www.microsaw.fi/pdf/litao3.pdf

Frequency Shifts: www.microsaw.fi/pdf/table.pdf

Links to Company Information

Servicies: www.microsaw.fi/serviceandprices.php

Contacts: www.microsaw.fi/contacts.php

©2015

Microsaw OY reserves the right to discontinue manufacturing and delivery of the product. Microsaw's liability is limited only to the product. Microsaw does not accept any liability for applications, which are implemented using the product. A statement about the suitability of the product for certain application ultimately incumbent on Customer to conclude whether the product is suitable for use in a particular application.